NBL4522, Flat brushless DC Motor,50Watt

Motor Data			1004002201	1004002203	1004002205	1004002206			
Values at nominal voltage									
1	Nominal voltage	U_N	24	18	24	36			V
2	No load speed	n_0	7000	6720	4730	3360			rpm
3	No load current	I_0	250	250	115	53			mA
4	Stall torque	M_H	769.5	925.0	382.0	459.0			mNm
5	Stall current	M_I	24.0	38.9	8.5	4.8			A
6	Max. efficiency	η_{max}	83	85	79	82			%
7	Nominal power	W_N	44.3	49.7	24.2	21.2			W
8	Nominal speed	n_N	5400	5220	3480	2360			rpm
9	Nominal torque (max.continuous torque)	M_N	82	95.2	69.5	90			mNm
10	Nominal current (max.continuous current)	I_N	2.5	3.5	1.41	0.9			A
Characteristics									
11	Terminal resistance phase to phase	R	1	0.463	2.82	7.46			Ω
12	Terminal inductance phase to phase	L	0.3	0.17	0.65	2.53			mH
13	Back-EMF constant	K_E	3.39	2.66	5.01	10.60			mV/rpm
14	Torque constant	K_M	32.40	25.41	47.80	101.19			mNm/A
15	Speed constant	K_n	295	376	200	94			rpm/V
16	Current constant	K_I	0.031	0.039	0.021	0.010			A/mNm
17	Speed / torque gradient	$\Delta n/\Delta M$	9.10	7.26	12.38	7.32			rpm/mNm
18	Mechanical time constant	τ_m	12.0	9.9	16.9	10.0			ms
19	Rotor inertia	J	135.0	135.0	135.0	135.0			gcm²
Specifications									
20	Operating temperature range:								
	-Motor				-40……+100				℃
	-winding, max permissible				+125				℃
21	Direction of rotation				electronically reversible				
22	Max. speed	n_{max}			1000				rpm
23	Number of pole pairs				8				
24	Number of phases				3				
25	Magnet material				NdFeB				
26	Hall sensors				digital				
Mechanical data									
27	Bearing type				ball bearings, preloaded				
28	Axial play				0 - 0.3				mm
29	Max. axial load (dynamic)				3.8				N
30	Max. force for press fits (static)				53				N
	(static, shaft supported)				1000				N
31	Max. radial loading, 5 mm from flange				21				N
Product									
32	Weight of motor		110						g

Dimensional drawing

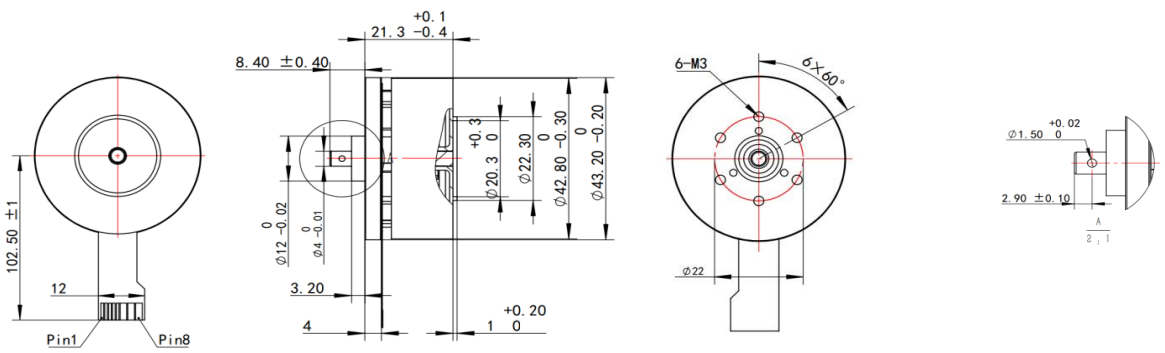

Option, cable and connection information

Connecttor: FPC,11-pol,Pitch,1.0mm,top contact style

V_{hall} 4.5V……24V	Pin 1	GND	Pin 5
Hall sensors C	Pin 2	Motor winding C	Pin 6
Hall sensors A	Pin 3	Motor winding B	Pin 7
Hall sensors B	Pin 4	Motor winding A	Pin 8

Note:About the torque curves,please contact us for more information.